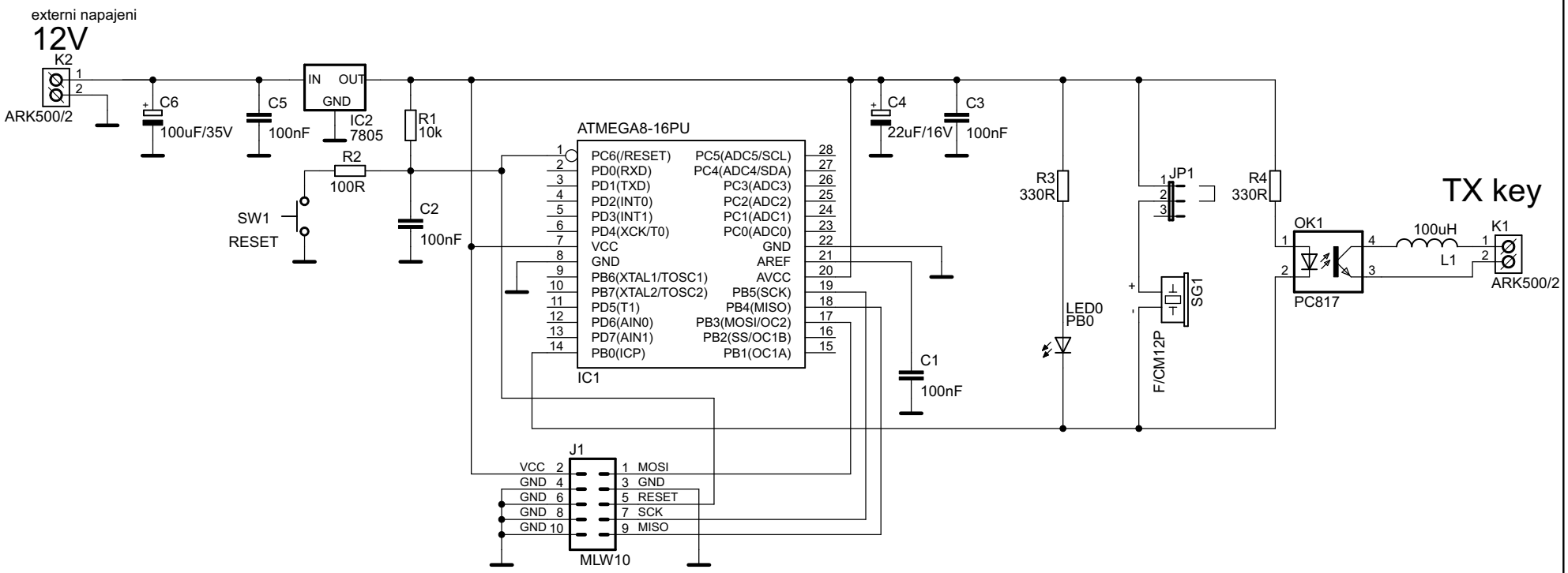

OK0EKV klicovadlo

TITLE: ATmega8_majak

Document Number:

REV:

Date: 3.11.2010 22:14:49

Sheet: 1/1