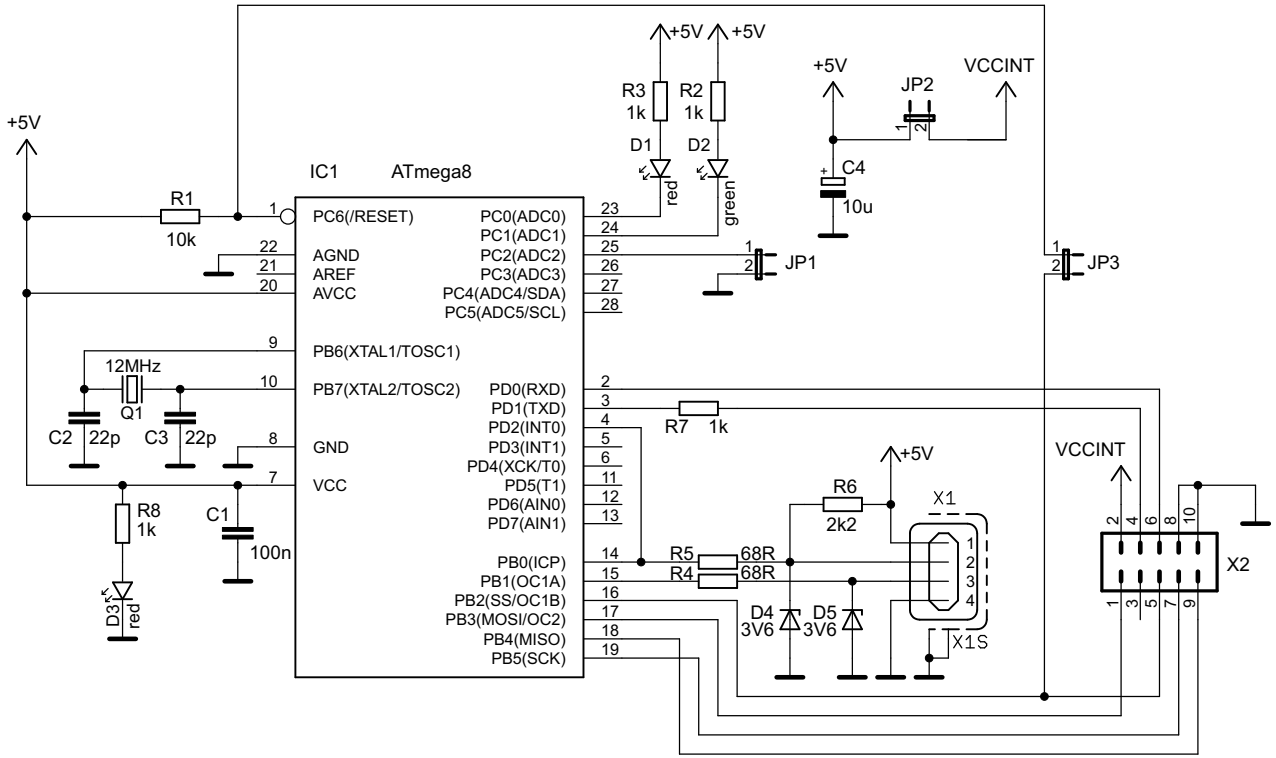

USB programátor pro Atmel

TITLE: AT_programator_USB

Document Number:

REV:

Date: 26.11.2011 9:41:13

Sheet: 1/1